CUBE in-a-box
Ready-to-Work Office Cubicles

V1.series - Small cubicle 48"W x 30"D

ASSEMBLY INSTRUCTIONS – Steps (1) to (10)

- TOOLS needed: 1 philips screwdriver or 1 electric drill with philips bit
- QUESTIONS: **call 1-888-880-CUBE** or for more info visit **www.cubeinabox.com**

Tip for (7) Note the mark on each post to ease height adjustment. You can use a screw driver to squeeze the chromed screw

Tip for (8) At first, slide down the 2 side parts (chromed wire) on posts, then adjust the shelf on top of the 4 black plastic supports and screw from underneath

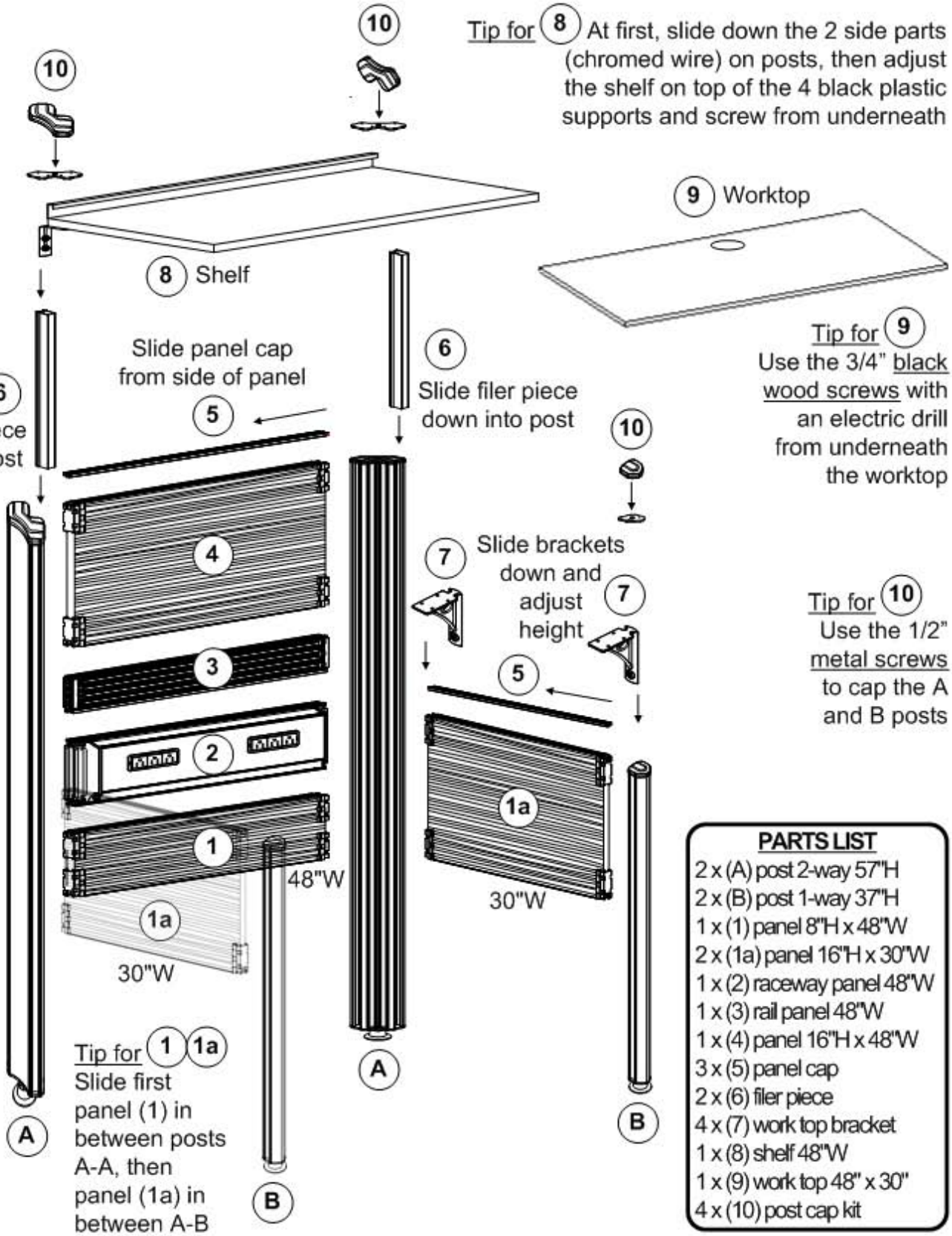

Tip for (9) Use the 3/4" black wood screws with an electric drill from underneath the worktop

Tip for (3) The rail panel has to be installed facing up to allow trays to hang on it

Tip for (10) Use the 1/2" metal screws to cap the A and B posts

Tip for (2) First, slide down the frame of the raceway in between posts A and A, then place the two "cavaliers" (small plastic molded parts) used to hold the doors on each side

Tip for (1)(1a) Slide first panel (1) in between posts A-A, then panel (1a) in between A-B

PARTS LIST

- 2 x (A) post 2-way 57"H
- 2 x (B) post 1-way 37"H
- 1 x (1) panel 8"H x 48"W
- 2 x (1a) panel 16"H x 30"W
- 1 x (2) raceway panel 48"W
- 1 x (3) rail panel 48"W
- 1 x (4) panel 16"H x 48"W
- 3 x (5) panel cap
- 2 x (6) filer piece
- 4 x (7) work top bracket
- 1 x (8) shelf 48"W
- 1 x (9) work top 48" x 30"
- 4 x (10) post cap kit